S series

6 Axis Scara Robot

Model **S7-906A**

Max Motion Range	906mm
Max payload	7kg
Repeatability	±0.03mm
Mounting method	Ground/Suspension
Weight	52kg
IP level	IP67

Parameters of each axis

Joint / Content	#1	#2	#3	#4	#5	#6
Max Operating Speed	355°/s	355°/s	355°/s	480°/s	450°/s	705°/s
Max Motion Range	+170°/-170°	+130°/-96°	+65°/-195°	+170°/-170°	+120°/-120°	+360°/-360°

Electrical parameters Integrated Signal Source 8 Channels（30V，0.5A）

Integrated Air Source 4-ϕ4，5bar
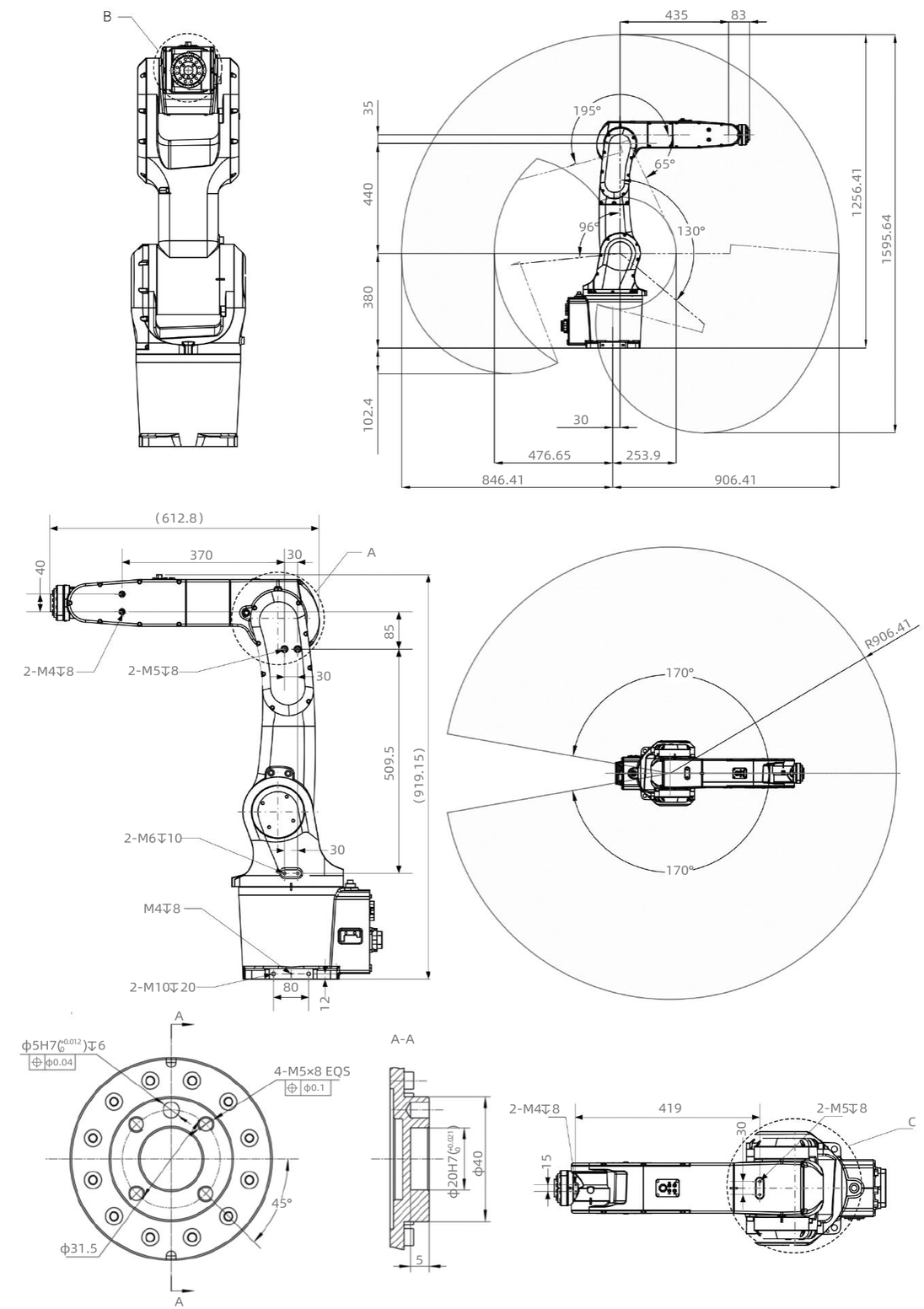
Outer Dimensions and Motion Range