S series

6 Axis Scara Robot

Model **S10-1206A**

Max Motion Range	1206mm
Max payload	10kg
Repeatability	±0.05mm
Mounting method	Ground/Suspension
Weight	76kg
IP level	IP54

Parameters of each axis

Joint / Content	#1	#2	#3	#4	#5	#6
Max Operating Speed	297°/s	223°/s	223°/s	480°/s	360°/s	705°/s
Max Motion Range	+170°/-170°	+125°/-95°	+65°/-195°	+170°/-170°	+120°/-120°	+360°/-360°

Electrical parameters Integrated Signal Source 8 Channels（30V，0.5A）

Integrated Air Source 4-ϕ4，5bar
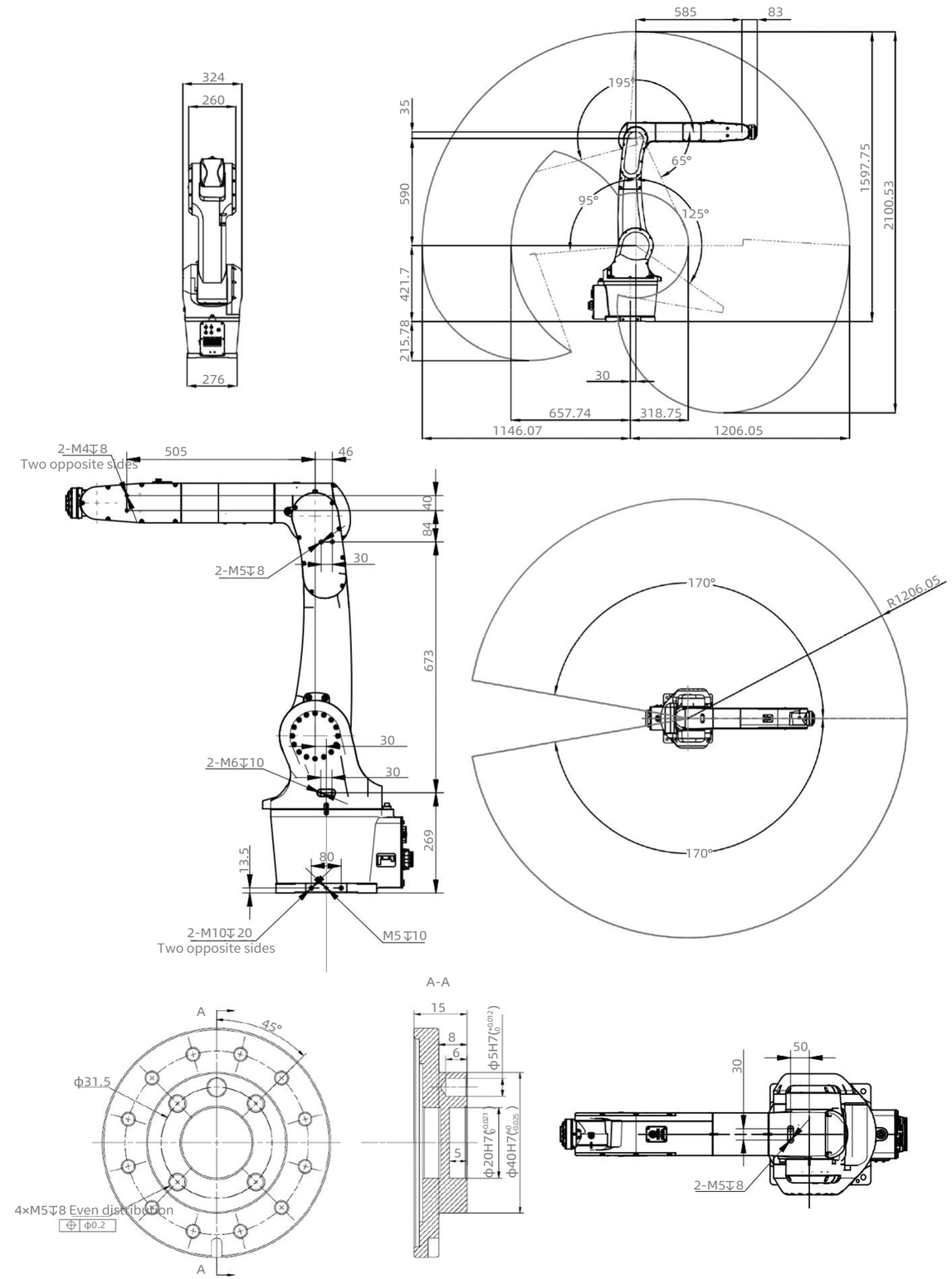
Outer Dimensions and Motion Range